12V | 7.8Ah

NLP30

INSANE PERFORMANCE. LITHIUM POWERSPORT BATTERY.™

2X MORE POWER.

10X MORE STARTS.

5X LONGER LIFE.

DYNAMIC BMS.

Equipped with an auto-enabled, advanced battery management system that provides maximum protection, performance, and bi-directional cell equalization for long-lasting stability. No BMS reset needed.

ACTIVE PROTECTION.

Protects against over-charge, extreme-heat, short-circuit, over-discharge, extreme-cold, and over-current.

SHOCK ABSORBTION.

Designed with a custom rubber dampening base and foam inserts to extend the life of the battery and keep connections secure.

NOCO®

30339 Diamond Parkway, #102
Glenwillow, OH 44139 | USA
1.800.456.6626
no.co

UNIVERSAL MOUNTING.

The removable mounting block allows the battery to fit more applications. The threaded insert enables direct-mounting for additional simplicity and security.

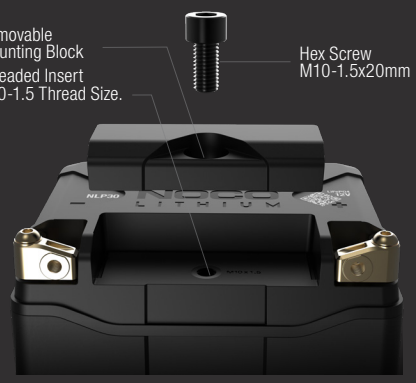

FEMALE.

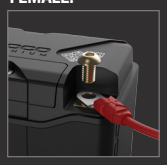

SIDE.

TOP.

FRONT.

MULTI-CONNECTION TERMINALS.

Equipped with premium IP66 waterproof copper PCB plates. NLP Terminals can be mounted from the front, side, or top, and can be removed altogether depending on the application.

RAPID RECHARGE.

Use the Lithium mode on a Genius charger to fully recharge an NLP battery in minutes. See Genius models and charging times below.

COMPATABLE SIZES.

BCI SIZES	YUASA SIZES	ETX SIZES
BTX30L-BS	GYZ32HL	ETX30L
BTX30L	YIX30L	

RECHARGE TIME

GENIUS1	480 Minutes
GENIUS2	240 Minutes
GENIUS5	96 Minutes
GENIUS10	48 Minutes

TECHNICAL SPECIFICATIONS

BCI SIZE:	30
CHEMISTRY:	Lithium Iron Phosphate (LiFePO4)
NOMINAL VOLTAGE:	12.8
AMP-HOURS:	7.8
WATT-HOURS (WH):	99.84
STARTING CURRENT:	700
CHARGING VOLTAGE (V):	14.6V
CHARGING CURRENT (A):	24A (Max)
OPERATING TEMPERATURE:	-20ºC to 60ºC
CHARGING TEMPERATURE:	-10ºC to 50ºC
STORAGE TEMPERATURE:	-20ºC to 60ºC
LITHIUM CONTENT:	9.36 g
INTERNAL BATTERY WEIGHT:	2.37 lbs (1.08 kg)
WEIGHT:	5.0 lbs (2.27kg)
VOLUMETRICS:	**Retail Packaging:** Dimensions: 7.83" x 3.7" x 8.15" Weight: 5.24 lbs UPC: 0-46221-19010-6 **Inner Carton:** Dimensions: 8.50" x 8.15" x 4.06" Weight: 5.48 lbs **Master Carton:** Dimensions: 16.73" x 8.98" x 8.82" Weight: 22.70 lbs Quantity: 4 UCC: 10046221190073 **Units Per Pallet:** 160 Units

WHAT'S IN THE BOX

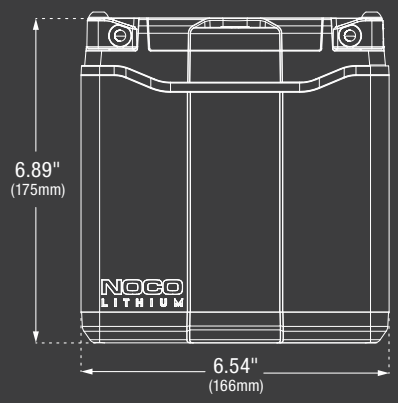

LxWxH
6.54" x 4.96 " x 6.89"
(166mm x 126mm x 175mm)

*Accessories not to scale with NLP30

M6 Hex Screw
1mm x 8mm

M6 Hex Screw
1mm x 10mm

M10 Hex Screw
1.5mm x 20mm

User Guide

Hex Key

NOCO
30339 Diamond Parkway, #102
Glenwillow, OH 44139 | USA
1.800.456.6626
no.co